Dimension

B3, IM1001, Foot Mounted

Output (kW)				FRAME SIZE	FIG. NO.	A	AA	AB	AC	AD	AG	AS	B	B'	BA	BA'	BB	BC	BE	C	H
2P	4P	6P	8P																		
0.75 1.1	0.55 0.75	0.37 0.55	0.18 0.25	80M		125	35	161	156	161	125	67.5	100	--	35.5	35.5	130	18.5	40	50	80
1.5	1.1	0.75	0.37	90S		140	40	180	176	171	125	67.5	100	--	33	33	125	36	40	56	90
2.2	1.5	1.1	0.55	90L		140	40	180	176	171	125	67.5	125	100	33	58	150	36	40	56	90
3 --	2.2 3	1.5 --	0.75 1.1	100L		160	40	200	196	191	147	78.5	140	--	43.5	43.5	176	21	50	63	100
4	4	2.2	1.5	112M		190	50	235	218	198.5	147	78.5	140	--	45.5	45.5	176	28	50	70	112
5.5 7.5	5.5 --	3 --	2.2 --	132S		216	63.5	259	258	216	147	78.5	140	--	59	59	184	6	50	89	132
-- --	7.5 --	4 5.5	3 --	132M		216	63.5	259	258	216	147	78.5	178	140	59	97	222	6	50	89	132
11 15	11 --	7.5 --	4 5.5	160M		254	71	300	317	271	193	91.5	210	--	66	66	256	38	89	108	160
18.5	15	11	7.5	160L		254	71	300	317	271	193	91.5	254	210	66	101	300	38	89	108	160
22	18.5	--	--	180M		279	72	330	354	297	193	91.5	241	-	68.5	68.5	292	34	89	121	180
--	22	15	11	180L		279	72	330	354	297	193	91.5	279	241	68.5	106.5	330	34	89	121	180
30 37	30	18.5 22	15 --	200L		318	88	378	398	330	231	110.5	305	--	90	90	365	53	106	133	200
--	37	--	18.5	225SC		356	94	416	449	356	231	110.5	286	--	90	90	350	30.5	106	149	225
45	--	--	--	225MA		356	94	416	449	356	231	110.5	311	286	90	115	375	30.5	106	149	225
--	45	30	22	225MC		356	84	416	449	356	231	110.5	311	286	90	115	375	30.5	106	149	225
55	--	--	--	250MA		406	112	480	498	398	255	122.5	349	--	105	105	425	45.5	119	168	250
--	55	37	30	250MC		406	112	480	498	398	255	122.5	349	--	105	105	425	45.5	119	168	250

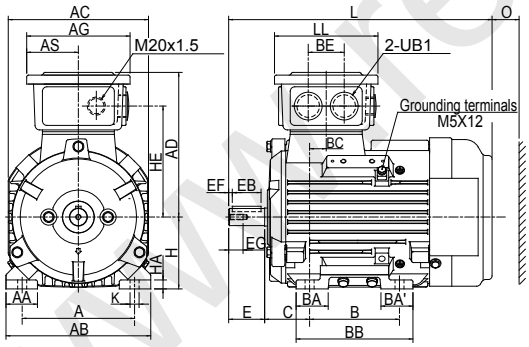

Fig1 F80

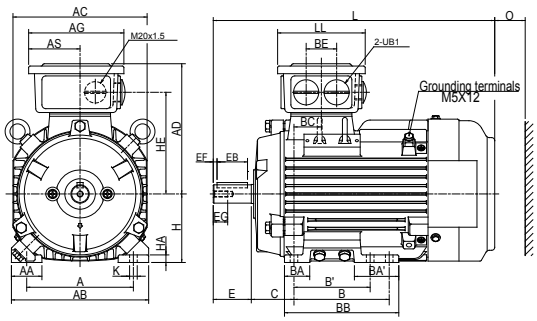

Fig1 F90-112

Note:
1. Dimensions in mm
2. Tolerance of Shaft End Diameter D: Under ψ19 ~ ψ28:j6.
3. Tolerance of shaft center high H: +0, -0.5.
4. Tolerance of N:j6.

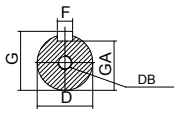

www.redukt0r-mex.ru

HA	HE	K	L	LL	O	UB	SHAFT EXTENSION									BEARING	
							D	E	EB	EF	EG	F	G	GA	DB	DRIVE END	OPPOSITE DRIVE END
10	123.5	10	293	115	40	M25x1.5	19	40	32	4	16	6	15.5	21.5	M6	6204ZZC3	6204ZZC3
10	133.5	10	344.5	115	40	M25x1.5	24	50	40	5	19	8	20	27	M8	6205ZZC3	6205ZZC3
10	133.5	10	369.5	115	40	M25x1.5	24	50	40	5	19	8	20	27	M8	6205ZZC3	6205ZZC3
12	157	12	392	125	50	M32x1.5	28	60	50	5	22	8	24	31	M10	6306ZZC3	6306ZZC3
13	164.5	12	412.5	125	50	M32x1.5	28	60	50	5	22	8	24	31	M10	6306ZZC3	6306ZZC3
16	182	12	466	125	50	M32x1.5	38	80	70	5	28	10	33	41	M12	6308ZZC3	6306ZZC3
16	182	12	504	125	50	M32x1.5	38	80	70	5	28	10	33	41	M12	6308ZZC3	6306ZZC3
18	215	14.5	608	193	60	M40x1.5	42	110	100	5	36	12	37	45	M16	6309ZZC3	6307ZZC3
18	215	14.5	652	193	60	M40x1.5	42	110	100	5	36	12	37	45	M16	6309ZZC3	6307ZZC3
20	241	14.5	672	193	70	M40x1.5	48	110	100	5	36	14	42.5	51.5	M16	6311C3	6310C3
20	241	14.5	710	193	70	M40x1.5	48	110	100	5	36	14	42.5	51.5	M16	6311C3	6310C3
24	262	18.5	770	231	80	M50x1.5	55	110	100	5	42	16	49	59	M20	6312C3	6212C3
28	288	18.5	816	231	90	M50x1.5	60	140	125	7.5	42	18	53	64	M20	6313C3	6213C3
28	288	18.5	811	231	90	M50x1.5	55	110	100	5	42	16	49	59	M20	6312C3	6212C3
28	288	18.5	841	231	90	M50x1.5	60	140	125	7.5	42	18	53	64	M20	6313C3	6213C3
30	322	24	921	255	105	M63x1.5	60	140	125	7.5	42	18	53	64	M20	6313C3	6313C3
30	322	24	921	255	105	M63x1.5	65	140	125	7.5	42	18	58	69	M20	6315C3	6313C3

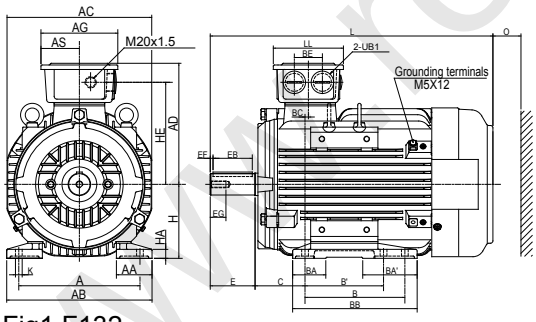

Fig1 F132

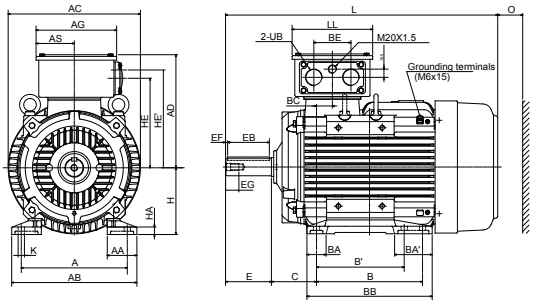

Fig1 F160

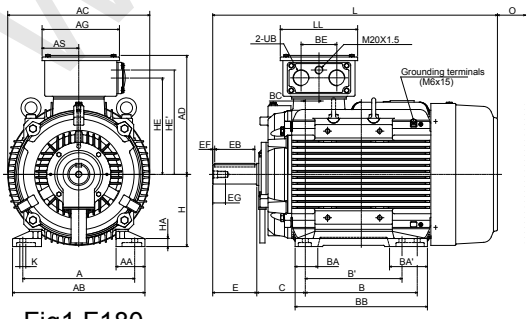

Fig1 F180

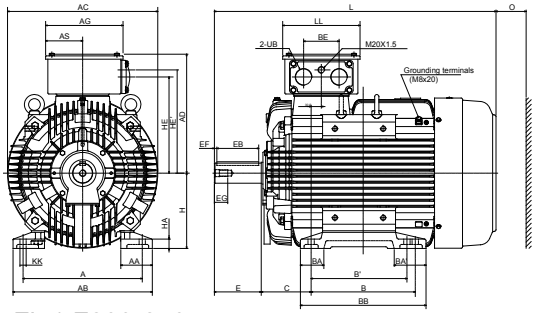

Fig1 F200-250

www.redukto-r-mex.ru

Dimension

B3, IM1001, Foot Mounted

Output (kW)				FRAME SIZE	FIG. NO.	A	AA	AB	AC	AD	AG	AS	B	B'	BA	BA'	BB	BC	BE	C	H
2P	4P	6P	8P																		
75	-	-	-	280SA		457	110	560	550	446	255	122.5	368	-	130	130	445	48	119	190	280
--	75	45	37	280SB		457	110	560	550	446	255	122.5	368	--	130	130	445	48	119	190	280
--	75	45	37	280SC		457	110	560	550	446	255	122.5	368	--	130	130	445	48	119	190	280
90	--	--	--	280MA		457	110	560	550	446	255	122.5	419	--	130	137	495	48	119	190	280
--	90	55	45	280MB		457	110	560	550	446	255	122.5	419	--	130	137	495	48	119	190	280
--	90	55	45	280MC		457	110	560	550	446	255	122.5	419	--	130	137	495	48	119	190	280
110	--	--	--	315SA		508	115	615	620	527	336	163	406	--	150	150	508	53	140	216	315
--	110	75	55	315SB		508	115	615	620	527	336	163	406	--	150	150	508	53	140	216	315
--	110	75	55	315SC		508	115	615	620	527	336	163	406	--	150	150	508	53	140	216	315
132 160	--	--	--	315MA		508	115	615	620	527	336	163	457	-	213	137	540	53	140	216	315
--	132 160	90 110	75	315MB		508	115	615	620	527	336	163	457	-	213	137	540	53	140	216	315
--	132 160	90 110	75	315MC		508	115	615	620	527	336	163	457	-	213	137	540	53	140	216	315
200	--	--	--	315LA		508	150	650	620	527	336	163	508	--	180	205	730	53	140	216	315
	200	132 160	90 110	315LB		508	150	650	620	527	336	163	508	--	180	205	730	53	140	216	315
	200	132 160	90 110	315LC		508	150	650	620	527	336	163	508	--	180	205	730	53	140	216	315
	--	--	--	315DA		508	150	650	682	590	412	189	630 900	-	255	255	1080	68	180	216	315
	250 315	200 250	132 160 200	315DB		508	150	650	682	590	412	189	630 900	-	255	255	1080	68	180	216	315
--	250 315	200 250	132 160 200	315DC		508	150	650	682	590	412	189	630 900	-	255	255	1080	68	180	216	315

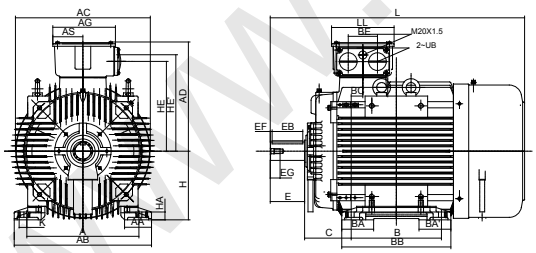

Fig1 F280

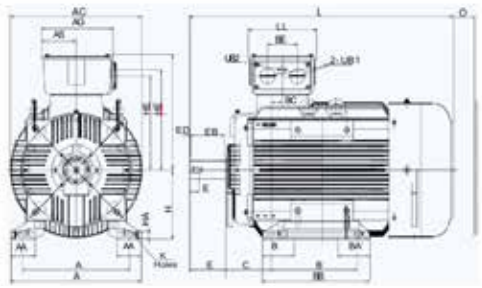

Fig1 F315SM

Note:
1. Dimensions in mm
2. Tolerance of Shaft End Diameter D: Under ψ19 ~ ψ28:j6.
3. Tolerance of shaft center high H: +0, -0.5.
4. Tolerance of N:j6.

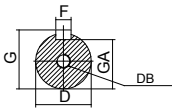

www.redukto-r-mex.ru

HA	HE	HE'	K	L	LL	O	UB	UB2	SHAFT EXTENSION									BEARING	
									D	E	EB	EF	EG	F	G	GA	DB	DRIVE END	OPPOSITE DRIVE END
32	367	394	24	1037	255	140	M63x1.5	M20x1.5	65	140	125	7.5	40	18	58	69	M20	6316C3	6314C3
32	367	394	24	1037	255	140	M63x1.5	M20x1.5	75	140	125	7.5	40	20	67.5	79.5	M20	6318C3	6316C3
32	367	394	24	1037	255	140	M63x1.5	M20x1.5	75	140	125	7.5	40	20	67.5	79.5	M20	NU318	6316C3
32	367	394	24	1087.5	255	140	M63x1.5	M20x1.5	65	140	125	7.5	40	18	58	69	M20	6316C3	6314C3
32	367	394	24	1087.5	255	140	M63x1.5	M20x1.5	75	140	125	7.5	40	20	67.5	79.5	M20	6318C3	6316C3
32	367	394	24	1087.5	255	140	M63x1.5	M20x1.5	75	140	125	7.5	40	20	67.5	79.5	M20	6318C3	6316C3
35	430	460	28	1216	322	180	M63x1.5	M20x1.5	65	140	125	7.5	42	18	58	69	M20	6316C3	6314C3
35	430	460	28	1246	322	180	M63x1.5	M20x1.5	80	170	160	5	42	22	71	85	M20	6320C3	6316C3
35	430	460	28	1246	322	180	M63x1.5	M20x1.5	80	170	160	5	42	22	71	85	M20	NU320	6316C3
35	430	460	28	1266	322	180	M63x1.5	M20x1.5	65	140	125	7.5	42	18	58	69	M20	6316C3	6314C3
35	430	460	28	1296	322	180	M63x1.5	M20x1.5	80	170	160	5	42	22	71	85	M20	6320C3	6316C3
35	430	460	28	1296	322	180	M63x1.5	M20x1.5	80	170	160	5	42	22	71	85	M20	NU320	6316C3
45	430	460	28	1366	322	180	M63x1.5	M20x1.5	65	140	125	7.5	42	18	58	69	M20	6316C3	6314C3
45	430	460	28	1396	322	180	M63x1.5	M20x1.5	80	170	160	5	42	22	71	85	M20	6320C3	6316C3
45	430	460	28	1396	322	180	M63x1.5	M20x1.5	80	170	160	5	42	22	71	85	M20	NU320	6316C3
45	485	515	28	1674	372	200	M63x1.5	M20x1.5	65	140	125	7.5	42	18	58	69	M20	6316C3	6316C3
45	485	515	28	1704	372	200	M63x1.5	M20x1.5	85	170	160	5	42	22	76	90	M20	6322C3	6322C3
45	485	515	28	1704	372	200	M63x1.5	M20x1.5	95	170	160	5	50	25	86	100	M24	NU322	6322C3

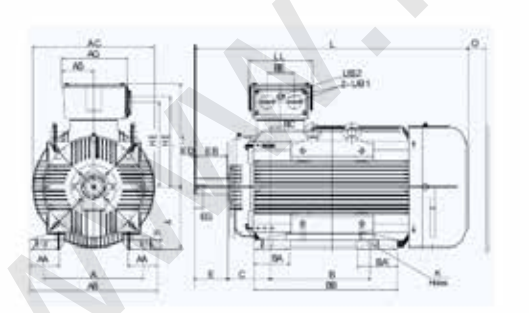

Fig1 F315L

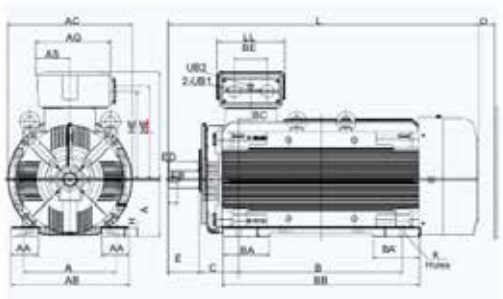

Fig1 F315D

www.redukTor-max.ru

Dimension

B5, IM3001, D Flange Mounted

Output (kW)				FRAME SIZE	FIG. NO.	FLANGE DIMENSION							AC	AD	AG	AS	BE	HE	HE'
2P	4P	6P	8P			LA	LE	M	N	P	S	T							
0.75 1.1	0.55 0.75	0.37 0.55	0.18 0.25	80M		12	40	165	130	200	12	3.5	156	161	125	67.5	40	123.5	
1.5	1.1	0.75	0.37	90S		12	50	165	130	200	12	3.5	176	171	125	67.5	40	133.5	
2.2	1.5	1.1	0.55	90L		12	50	165	130	200	12	3.5	176	171	125	67.5	40	133.5	
3 --	2.2 3	1.5 --	0.75 1.1	100L		16	60	215	180	250	14.5	4	196	191	147	78.5	50	157	
4	4	2.2	1.5	112M		15	60	215	180	250	14.5	4	218	198.5	147	78.5	50	164.5	
5.5 7.5	5.5 --	3 --	2.2 --	132S		16	80	265	230	300	14.5	4	258	216	147	78.5	50	182	
-- --	7.5 --	4 5.5	3 --	132M		16	80	265	230	300	14.5	4	258	216	147	78.5	50	182	
11 15	11	7.5	4 5.5	160M		15	110	300	250	350	18.5	5	317	271	193	91.5	89	215	234.5
18.5	15	11	7.5	160L		15	110	300	250	350	18.5	5	317	271	193	91.5	89	215	234.5
22	18.5	--	--	180M		15	110	300	250	350	18.5	5	354	297	193	91.5	89	241	260.5
--	22	15	11	180L		15	110	300	250	350	18.5	5	354	297	193	91.5	89	241	260.5

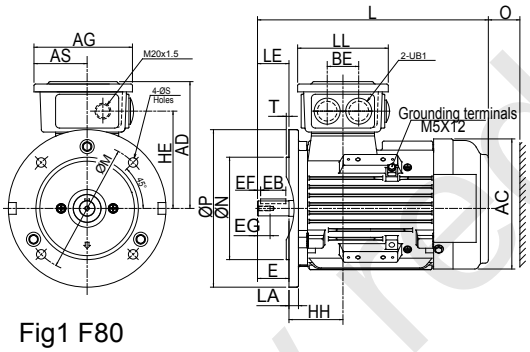

Fig1 F80

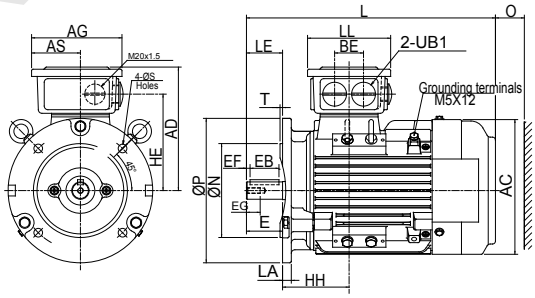

Fig1 F90

Note:
1. Dimensions in mm
2. Tolerance of Shaft End Diameter D: Under ψ19 ~ ψ28:j6.
3. Tolerance of shaft center high H: +0, -0.5.
4. Tolerance of N:j6.

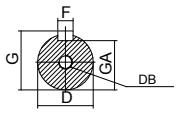

www.redukto-mex.ru

H	L	LL	O	UB	SHAFT EXTENSION									BEARING	
					D	E	EB	EF	EG	F	G	GA	DB	DRIVE END	OPPOSITE DRIVE END
68.5	293	115	40	M25x1.5	19	40	32	4	16	6	15.5	21.5	M6	6204ZZC3	6204ZZC3
92	344.5	115	40	M25x1.5	24	50	40	5	19	8	20	27	M8	6205ZZC3	6205ZZC3
92	369.5	115	40	M25x1.5	24	50	40	5	19	8	20	27	M8	6205ZZC3	6205ZZC3
84	392	125	50	M32x1.5	28	60	50	5	22	8	24	31	M10	6206ZZC3	6206ZZC3
98	412.5	125	50	M32x1.5	28	60	50	5	22	8	24	31	M10	6306ZZC3	6306ZZC3
95	466	125	50	M32x1.5	38	80	70	5	28	10	33	41	M12	6308ZZC3	6306ZZC3
95	504	125	50	M32x1.5	38	80	70	5	28	10	33	41	M12	6308ZZC3	6306ZZC3
146	608	193	60	M40x1.5	42	110	100	5	36	12	37	45	M16	6309ZZC3	6307ZZC3
146	652	193	60	M40x1.5	42	110	100	5	36	12	37	45	M16	6309ZZC3	6307ZZC3
155	672	193	70	M40x1.5	48	110	100	5	36	14	42.5	51.5	M16	6311C3	6310C3
155	710	193	70	M40x1.5	48	110	100	5	36	14	42.5	51.5	M16	6311C3	6310C3

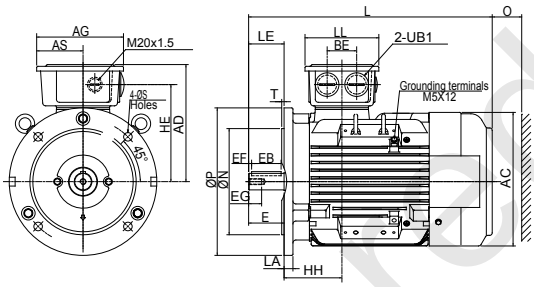

Fig1 F112

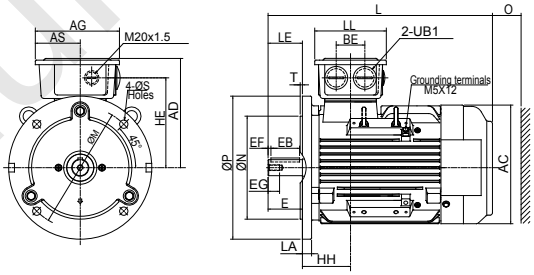

Fig1 F100, 132

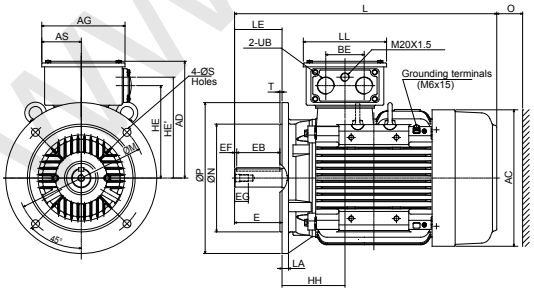

Fig1 F160

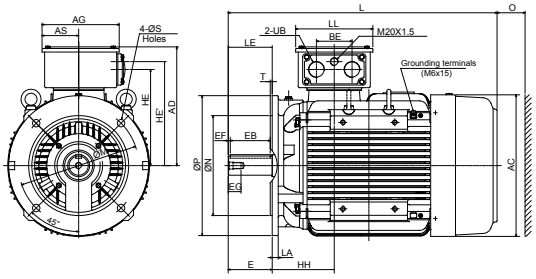

Fig1 F180

www.redukt-mex.ru

Dimension

B5, IM3001, D Flange Mounted

Output (kW)				FRAME SIZE	FIG. NO.	FLANGE DIMENSION							AC	AD	AG	AS	BE	HE	HE'
2P	4P	6P	8P			LA	LE	M	N	P	S	T							
30 37	30	18.5 22	15	200L		17	110	350	300	400	18.5	5	398	330	231	110.5	106	262	289
--	37	--	18.5	225SC		20	140	400	350	450	18.5	5	449	356	231	110.5	106	288	315
45	--	--	--	225MA		20	110	400	350	450	18.5	5	449	356	231	110.5	106	288	315
--	45	30	22	225MC		20	140	400	350	450	18.5	5	449	356	231	110.5	106	288	315
55	--	--	--	250MA		22	140	500	450	550	18.5	5	498	398	255	122.5	119	322	349
--	55	37	30	250MC		22	140	500	450	550	18.5	5	498	398	255	122.5	119	322	349
75	--	--	--	280SA		22	140	500	450	550	18.5	5	550	446	255	122.5	119	367	394
--	75	45	37	280SB		22	140	500	450	550	18.5	5	550	446	255	122.5	119	367	394
--	75	45	37	280SC		22	140	500	450	550	18.5	5	550	446	255	122.5	119	367	394
90	--	--	--	280MA		22	140	500	450	550	18.5	5	550	446	255	122.5	119	367	394
--	90	55	45	280MB		22	140	500	450	550	18.5	5	550	446	255	122.5	119	367	394
--	90	55	45	280MC		22	140	500	450	550	18.5	5	550	446	255	122.5	119	367	394
110	--	--	--	315SA		25	140	600	550	660	24	6	660	527	336	163	140	430	460
--	110	75	55	315SB		25	170	600	550	660	24	6	660	527	336	163	140	430	460
--	110	75	55	315SC		25	170	600	550	660	24	6	660	527	336	163	140	430	460
132 160	--	--	--	315MA		25	140	600	550	660	24	6	660	527	336	163	140	430	460
--	132 160	90 110	75	315MB		25	170	600	550	660	24	6	660	527	336	163	140	430	460
--	132 160	90 110	75	315MC		25	170	600	550	660	24	6	660	527	336	163	140	430	460

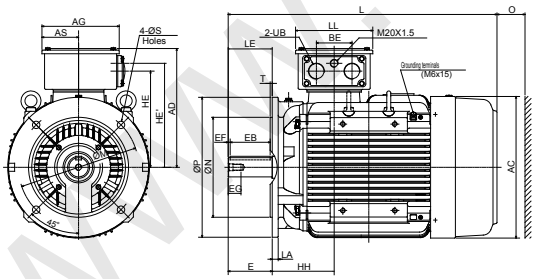

Fig1 F200

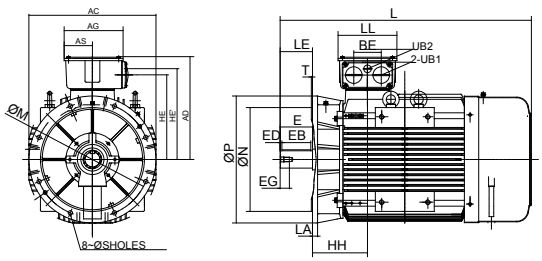

Fig1 F280

Note:
1. Dimensions in mm
2. Tolerance of Shaft End Diameter D: Under ψ19 ~ ψ28:j6.
3. Tolerance of shaft center high H: +0, -0.5.
4. Tolerance of N:j6.

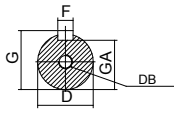

www.redukto-rnex.ru

HH	L	LL	O	UB1	UB2	SHAFT EXTENSION									BEARING	
						D	E	EB	EF	EG	F	G	GA	DB	DRIVE END	OPPOSITE DRIVE END
193	770	231	80	M50x1.5		55	110	100	5	42	16	49	59	M20	6312C3	6212C3
179.5	816	231	90	M50x1.5		60	140	125	7.5	42	18	53	64	M20	6313C3	6213C3
179.5	811	231	90	M50x1.5		55	110	100	5	42	16	49	59	M20	6312C3	6212C3
179.5	841	231	90	M50x1.5		60	140	125	7.5	42	18	53	64	M20	6313C3	6213C3
213.5	921	255	105	M63x1.5		60	140	125	7.5	42	18	53	64	M20	6313C3	6313C3
213.5	921	255	105	M63x1.5		65	140	125	7.5	42	18	58	69	M20	6315C3	6313C3
238	1037.5	255	140	M63x1.5	M20x1.5	65	140	125	7.5	42	18	58	69	M20	6316C3	6314C3
238	1037.5	255	140	M63x1.5	M20x1.5	75	140	125	7.5	42	20	67.5	79.5	M20	6318C3	6316C3
238	1037.5	255	140	M63x1.5	M20x1.5	75	140	125	7.5	42	20	67.5	79.5	M20	NU318	6316C3
238	1087.5	255	140	M63x1.5	M20x1.5	65	140	125	7.5	42	18	58	69	M20	6316C3	6314C3
238	1087.5	255	140	M63x1.5	M20x1.5	75	140	125	7.5	42	20	67.5	79.5	M20	6318C3	6316C3
238	1087.5	255	140	M63x1.5	M20x1.5	75	140	125	7.5	42	20	67.5	79.5	M20	NU318	6316C3
269	1216	322	180	M63x1.5		65	140	125	7.5	42	18	58	69	M20	6316C3	6314C3
269	1246	322	180	M63x1.5		80	170	160	5	42	22	71	85	M20	6320C3	6316C3
269	1246	322	180	M63x1.5		80	170	160	5	42	22	71	85	M20	NU320	6316C3
269	1266	322	180	M63x1.5	M20x1.5	65	140	125	7.5	42	18	58	69	M20	6316C3	6314C3
269	1296	322	180	M63x1.5	M20x1.5	80	170	160	5	42	22	71	85	M20	6320C3	6316C3
269	1296	322	180	M63x1.5		80	170	160	5	42	22	71	85	M20	NU320	6316C3

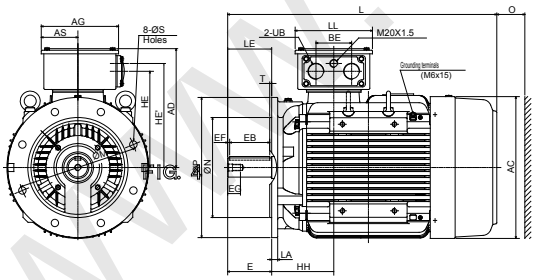

Fig1 225-250

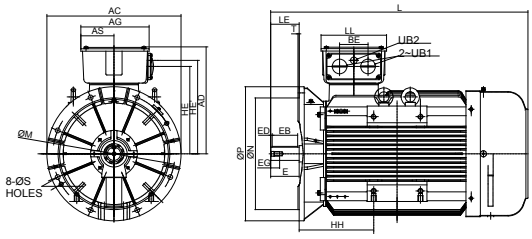

Fig1 F315SM

www.redukTor-mex.ru

Dimension

B35, IM2001, Foot and D Flange Mounted

Output (kW)				FRAME SIZE	FIG. NO.	FLANGE DIMENSION							A	AA	AB	AC	AD	AG	AS	B	B'	BA	BA'	BB
2P	4P	6P	8P			LA	LE	M	N	P	S	T												
0.75 1.1	0.55 0.75	0.37 0.55	0.18 0.25	80M		12	40	100	80	120	6	3	125	35	161	156	161	125	67.5	100	--	35.5	35.5	130
1.5	1.1	0.75	0.37	90S		10.33	50	115	95	140	8	3	140	40	180	176	171	125	67.5	100	--	33	33	125
2.2	1.5	1.1	0.55	90L		10.33	50	115	95	140	8	3	140	40	180	176	171	125	67.5	125	100	33	58	150
3 --	2.2 3	1.5 --	0.75 1.1	100L		9.84	60	130	110	160	8	3.5	160	40	200	196	191	147	78.5	140	--	43.5	43.5	176
4	4	2.2	1.5	112M		9.84	60	130	110	160	8	3.5	190	50	235	218	198.5	147	78.5	140	--	45.5	45.5	176
5.5 7.5	5.5 --	3 --	2.2 --	132S		16	80	265	230	300	14.5	4	216	63.5	259	258	216	147	78.5	140	--	59	59	184
--	7.5 --	4 5.5	3 --	132M		16	80	265	230	300	14.5	4	216	63.5	259	258	216	147	78.5	178	140	59	97	222
11 15	11 --	7,5 --	4 5.5	160M		15	110	300	250	350	18.5	5	254	71	300	317	271	193	91.5	210	--	66	66	256
18.5	15	11	7.5	160L		15	110	300	250	350	18.5	5	254	71	300	317	271	193	91.5	254	210	66	110	300
22	18.5	--	--	180M		15	110	300	250	350	18.5	5	279	72	330	354	297	193	91.5	241	--	68.5	68.5	292
--	22	15	11	180L		15	110	300	250	350	18.5	5	279	72	330	354	297	193	91.5	279	241	68.5	106.5	330
30 37	30	18.5 22	15	200L		17	110	350	300	400	18.5	5	318	88	378	398	330	231	110.5	305	--	90	90	365
--	37	--	--	225SC		20	140	400	350	450	18.5	5	356	94	416	449	356	231	110.5	286	--	90	90	350
45	--	--	--	225MA		20	110	400	350	450	18.5	5	356	94	416	449	356	231	110.5	311	286	90	115	375
--	45	30	30	225MC		20	140	400	350	450	18.5	5	356	94	416	449	356	231	110.5	311	286	90	115	375
55	--	--	--	250MA		22	140	500	450	550	18.5	5	406	112	480	498	398	255	122.5	349	--	105	105	425
--	55	37		250MC		22	140	500	450	550	18.5	5	406	112	480	498	398	255	122.5	349	--	105	105	425

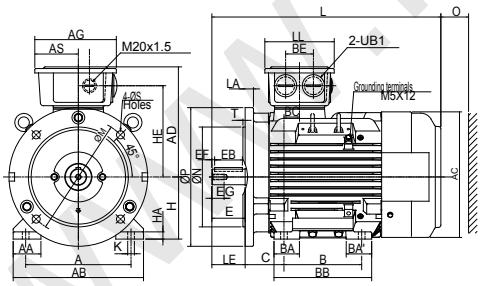

Fig.1 F112

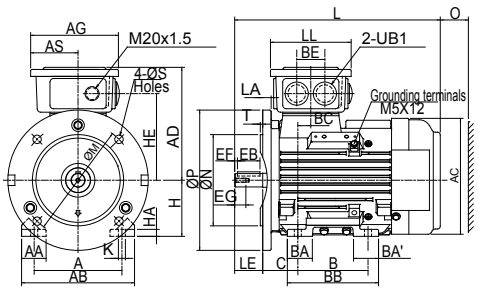

Fig1 F80

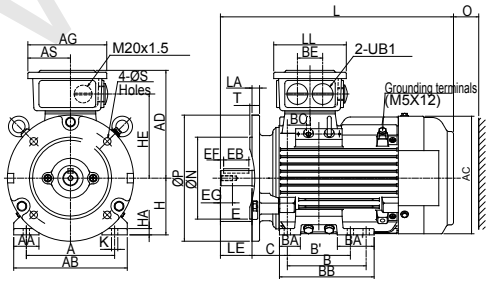

Fig1 F90

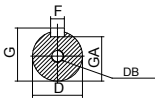

Note:
1. Dimensions in mm
2. Tolerance of Shaft End Diameter D: Under ψ19 ~ ψ28:j6.
3. Tolerance of shaft center high H: +0, -0.5.
4. Tolerance of N:j6.

www.redukt-or-mex.ru

BC	BE	C	H	HA	HE	HE'	K	L	LL	O	UB	SHAFT EXTENSION									BEARING	
												D	E	EB	EF	EG	F	G	GA	DB	DRIVE END	OPPOSITE DRIVE END
18.5	40	50	80	10	123.5		10	293	115	40	M25x1.5	19	40	32	4	16	6	15.5	21.5	M6	6204ZZC3	6204ZZC3
36	40	56	90	10	133.5		10	344.5	115	40	M25x1.5	24	50	40	5	19	8	20	27	M8	6205ZZC3	6205ZZC3
36	40	56	90	10	133.5		10	369.5	115	40	M25x1.5	24	50	40	5	19	8	20	27	M8	6205ZZC3	6205ZZC3
21	50	63	100	12	157		12	392.	125	50	M32x1.5	28	60	50	5	22	8	24	31	M10	6206ZZC3	6206ZZC3
28	50	70	112	13	164.5		12	412.5	125	50	M32x1.5	28	60	50	5	22	8	24	31	M10	6306ZZC3	6306ZZC3
6	50	89	132	16	182		12	466	125	50	M32x1.5	38	80	70	5	28	10	33	41	M12	6308ZZC3	6306ZZC3
6	50	89	132	16	182		12	504	125	50	M32x1.5	38	80	70	5	28	10	33	41	M12	6308ZZC3	6306ZZC3
38	89	108	160	18	215	234.5	14.5	608	193	60	M40x1.5	42	110	100	5	36	12	37	45	M16	6309ZZC3	6307ZZC3
38	89	108	160	18	215	234.5	14.5	652	193	60	M40x1.5	42	110	100	5	36	12	37	45	M16	6309ZZC3	6307ZZC3
34	89	121	180	20	241	260.5	14.5	672	193	70	M40x1.5	48	110	100	5	36	14	42.5	51.5	M16	6311C3	6310C3
34	89	121	180	20	241	260.5	14.5	710	193	70	M40x1.5	48	110	100	5	36	14	42.5	51.5	M16	6311C3	6310C3
53	106	133	200	24	262	289	18.5	770	231	80	M50x1.5	55	110	100	5	42	16	49	59	M20	6312C3	6212C3
30.5	106	149	225	28	288	315	18.5	816	231	90	M50x1.5	60	140	125	7.5	42	18	53	64	M20	6312C3	6213C3
30.5	106	149	225	28	288	315	18.5	811	231	90	M50x1.5	55	110	100	5	42	16	49	59	M20	6312C3	6212C3
30.5	106	149	225	28	288	315	18.5	841	231	90	M50x1.5	60	140	125	7.5	42	18	53	64	M20	6313C3	6213C3
45.5	119	168	250	30	322	349	24	921	255	105	M63x1.5	60	140	125	7.5	42	18	53	64	M20	6313C3	6313C3
45.5	119	168	250	30	322	349	24	921	255	105	M63x1.5	65	140	125	7.5	42	18	58	69	M20	6315C3	6313C3

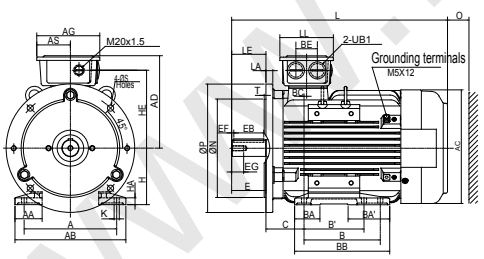

Fig1 F100-132

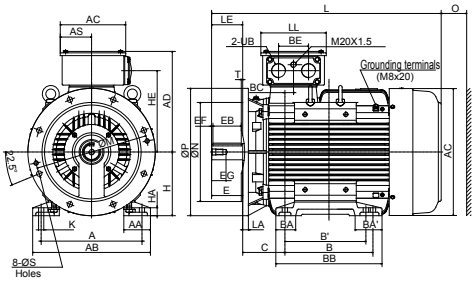

Fig1 F225-250

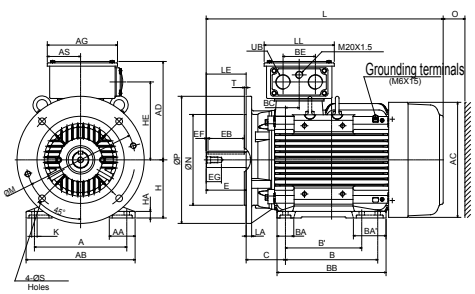

Fig1 F160

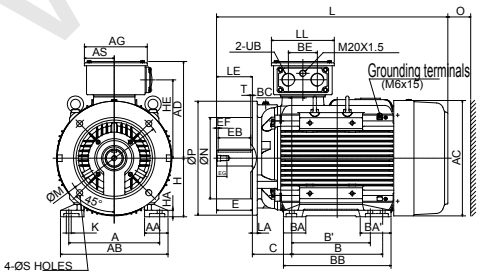

Fig1 F180

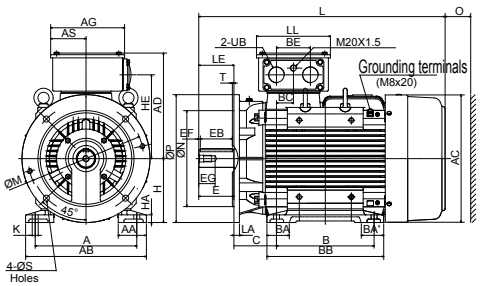

Fig1 F200

www.redukTor-mex.ru

Dimension

B35, IM2001, Foot and D Flange Mounted

Output (kW)				FRAME SIZE	FIG. NO.	FLANGE DIMENSION							A	AA	AB	AC	AD	AG	AS	B	B'	BA	BA'	BB
2P	4P	6P	8P			LA	LE	M	N	P	S	T												
75	--	--	--	280SA		22	140	500	450	550	18.5	5	457	110	560	550	446	255	122.5	368	--	130	130	445
--	75	45	37	280SB		22	140	500	450	550	18.5	5	457	110	560	550	446	255	122.5	368	--	130	130	445
--	75	45	37	280SC		22	140	500	450	550	18.5	5	457	110	560	550	446	255	122.5	368	--	130	130	445
90	--	--	--	280MA		22	140	500	450	550	18.5	5	457	110	560	550	446	255	122.5	419	--	130	137	495
--	90	55	45	280MB		22	140	500	450	550	18.5	5	457	110	560	550	446	255	122.5	419	--	130	137	495
--	90	55	45	280MC		22	140	500	450	550	18.5	5	457	110	560	550	446	255	122.5	419	--	130	137	495
110	--	--	--	315SA		25	140	600	550	660	24	6	508	115	615	660	527	336	163	406	--	150	150	508
--	110	75	55	315SB		25	170	600	550	660	24	6	508	115	615	660	527	336	163	406	--	150	150	508
--	110	75	55	315SC		25	170	600	550	660	24	6	508	115	615	660	527	336	163	406	--	150	150	508
132 160	--	--	--	315MA		25	140	600	550	660	24	6	508	115	615	660	527	336	163	457	--	213	137	540
--	132 160	90 110	75	315MB		25	170	600	550	660	24	6	508	115	615	660	527	336	163	457	--	213	137	540
--	132 160	90 110	75	315MC		25	170	600	550	660	24	6	508	115	615	660	527	336	163	457	--	213	137	540
200	--	--	--	315LA		25	140	600	550	660	24	6	508	150	650	660	527	336	163	508	--	180	205	730
--	200	132 160	90 110	315LB		25	170	600	550	660	24	6	508	150	650	660	527	336	163	508	--	180	205	730
--	200	132 160	90 110	315LC		25	170	600	550	660	24	6	508	150	650	660	527	336	163	508	--	180	205	730
250 315	--	--	--	315DA		30	140	600	550	660	24	6	508	150	650	682	590	412	189	630 900	--	255	255	1080
--	250 315	200 250	132 160 200	315DB		30	170	600	550	660	24	6	508	150	650	682	590	412	189	630 900	--	255	255	1080
--	250 315	200 250	132 160 200	315DC		30	170	600	550	660	24	6	508	150	650	682	590	412	189	630 900	--	255	255	1080

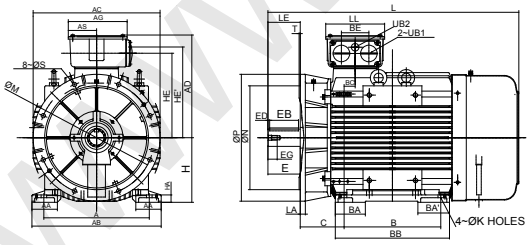

Fig1 F280

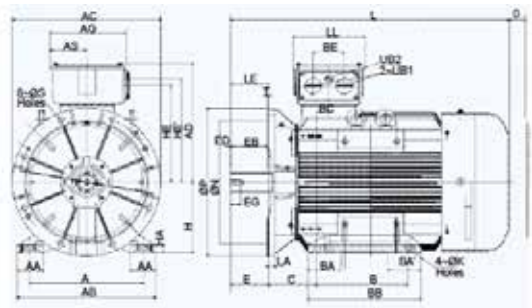

Fig1 F315SM

Note:
1. Dimensions in mm
2. Tolerance of Shaft End Diameter D:m6
3. Tolerance of Key Width F:h9
4. Tolerance of shaft center high H: +0, -1

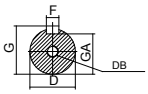

www.redukto-r-mex.ru

BC	BE	C	H	HA	HE	HE'	K	L	LL	O	UB1	UB2	SHAFT EXTENSION									BEARING	
													D	E	EB	EF	EG	F	G	GA	DB	DRIVE END	OPPOSITE DRIVE END
48	119	190	280	32	367	394	24	1037	255	140	M63x1.5	M20x1.5	65	140	125	7.5	42	18	58	69	M20	6316C3	6314C3
48	119	190	280	32	367	394	24	1037	255	140	M63x1.5	M20x1.5	75	140	125	7.5	42	20	67.5	79.5	M20	6318C3	6316C3
48	119	190	280	32	367	394	24	1037	255	140	M63x1.5	M20x1.5	75	140	125	7.5	42	20	67.5	79.5	M20	NU318	6316C3
48	119	190	280	32	367	394	24		255	140	M63x1.5	M20x1.5	65	140	125	7.5	42	18	58	69	M20	6316C3	6314C3
48	119	190	280	32	367	394	24		255	140	M63x1.5		75	140	125	7.5	42	20	67.5	79.5	M20	6318C3	6316C3
48	119	190	280	32	367	394	24		255	140	M63x1.5	M20x1.5	75	140	125	7.5	42	20	67.5	79.5	M20	NU318	6316C3
53	140	216	315	35	430	460	28	1216	322	180	M63x1.5		65	140	125	7.5	42	18	58	69	M20	6316C3	6314C3
53	140	216	315	35	430	460	28	1246	322	180	M63x1.5		80	170	160	5	42	22	71	85	M20	6320C3	6316C3
53	140	216	315	35	430	460	28	1246	322	180	M63x1.5		80	170	160	5	42	22	71	85	M20	NU320	6316C3
53	140	216	315	35	430	460	28	1266	322	180	M63x1.5		65	140	125	7.5	42	18	58	69	M20	6316C3	6314C3
53	140	216	315	35	430	460	28	1296	322	180	M63x1.5		80	170	160	5	42	22	71	85	M20	6320C3	6316C3
53	140	216	315	35	430	460	28	1296	322	180	M63x1.5		80	170	160	5	42	22	71	85	M20	NU320	6316C3
53	140	216	315	45	430	460	28	1366	322	180	M63x1.5	M20x1.5	65	140	125	7.5	42	18	58	69	M20	6316C3	6314C3
53	140	216	315	45	430	460	28	1396	322	180	M63x1.5	M20x1.5	80	170	160	5	42	22	71	85	M20	6320C3	6316C3
53	140	216	315	45	430	460	28	1396	322	180	M63x1.5	M20x1.5	80	170	160	5	42	22	71	85	M20	NU320	6316C3
68	180	216	315	45	485	515	28	1674	372	200	M63x1.5	M20x1.5	65	140	125	7.5	42	18	58	69	M20	6316C3	6316C3
68	180	216	315	45	485	515	28	1704	372	200	M63x1.5	M20x1.5	85	170	160	5	42	22	76	90	M20	6322C3	6322C3
68	180	216	315	45	485	515	28	1704	372	200	M63x1.5	M20x1.5	95	170	160	5	50	25	86	100	M24	NU322	6322C3

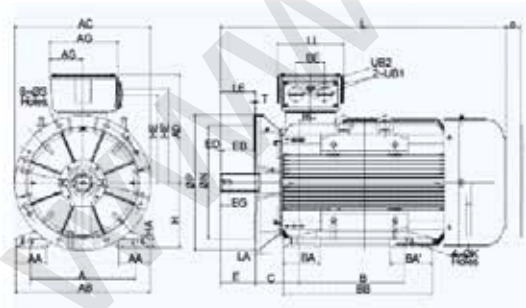

Fig1 F315L

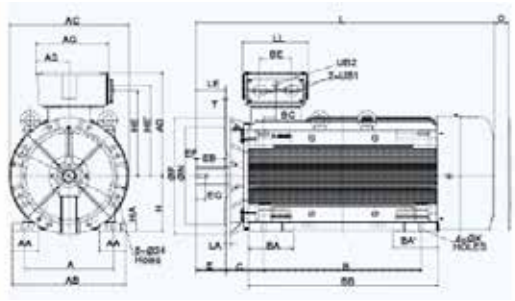

Fig1 F315D

www.redukto-r-nev.ru

Dimension

B14, IM3601, C Face Mounted

Output (kW)				FRAME SIZE	FIG. NO.	FLANGE DIMENSION						AC	AD	AG	AS	BE	HE	HE'
2P	4P	6P	8P			LE	M	N	P	S	T							
0.75 1.1	0.55 0.75	0.37 0.55	0.18 0.25	80M		40	100	80	120	M6	3	156	161	125	67.5	40	123.5	
1.5	1.1	0.75	0.37	90S		50	115	95	140	M8	3	176	171	125	67.5	40	133.5	
2.2	1.5	1.1	0.55	90L		50	115	95	140	M8	3	176	171	125	67.5	40	133.5	
3 --	2.2 3	1.5 --	0.75 1.1	100L		60	130	110	160	M8	3.5	196	191	147	78.5	50	157	
4	4	2.2	1.5	112M		60	130	110	160	M8	3.5	218	198.5	147	78.5	50	164.5	
5.5 7.5	5.5 -	3 -	2.2 -	132S		80	165	130	200	M10	3.5	258	216	147	78.5	50	182	
-- --	7.5 --	4 5.5	3 --	132M		80	165	130	200	M10	3.5	258	216	147	78.5	50	182	
11 15	11	7.5	4 5.5	160M		110	215	180	250	M12	4	317	271	193	91.5	89	215	234.5
18.5	15	11	7.5	160L		110	215	180	250	M12	4	317	271	193	91.5	89	215	234.5

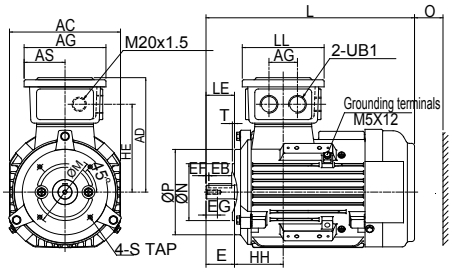

Fig1 F80

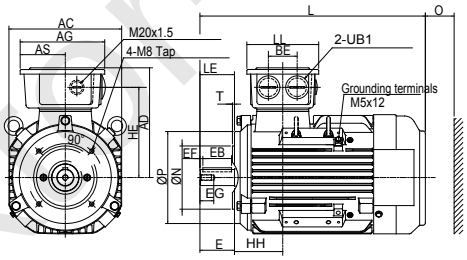

Fig1 F90-112

B34, IM2101, Foot and C face Mounted

Output (kW)				FRAME SIZE	FIG. NO.	FLANGE DIMENSION						A	AA	AB	AC	AD	AG	AS	B	B'	BA	BA'	BB
2P	4P	6P	8P			LE	M	N	P	S	T												
0.75 1.1	0.55 0.75	0.37 0.55	0.18 0.25	80M		40	100	80	120	M6	3	125	35	161	156	161	125	67.5	100	--	35.5	35.5	130
1.5	1.1	0.75	0.37	90S		50	115	95	140	M8	3	140	40	180	176	171	125	67.5	100	--	33	33	125
2.2	1.5	1.1	0.55	90L		50	115	95	140	M8	3	140	40	180	176	171	125	67.5	125	100	33	58	150
3 --	2.2 3	1.5 --	0.75 1.1	100L		60	130	110	160	M8	3.5	160	40	200	196	191	147	78.5	140	--	43.5	43.5	176
4	4	2.2	1.5	112M		60	130	110	160	M8	3.5	190	50	235	218	198.5	147	78.5	140	--	43.5	43.5	176
5.5 7.5	5.5 -	3 -	2.2 -	132S		80	165	130	200	M10	3.5	216	63.5	259	258	216	147	78.5	140	--	59	59	184
-- --	7.5 --	4 5.5	3 --	132M		80	165	130	200	M10	3.5	216	63.5	259	258	216	147	78.5	178	140	59	97	222
11 15	11	7.5	4 5.5	160M		110	215	180	250	M12	4	254	71	300	317	271	193	91.5	210	--	66	66	256
18.5	15	11	7.5	160L		110	215	180	250	M12	4	254	71	300	317	271	193	91.5	254	210	66	110	300

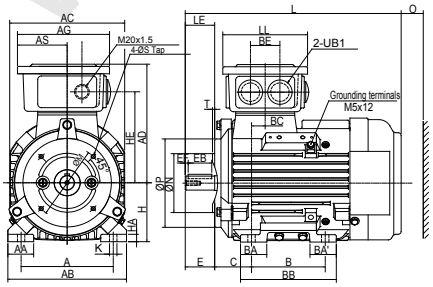

Fig1 F80

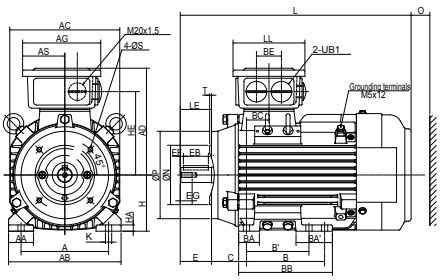

Fig1 F90-112

www.redukter-mex.ru

HH	L	LL	O	UB1	UB2	SHAFT EXTENSION									BEARING	
						D	E	EB	EF	EG	F	G	GA	DB	DRIVE END	OPPOSITE DRIVE END
68.5	293	115	40	M25x1.5		19	40	32	4	16	6	15.5	21.5	M6	6204ZZC3	6204ZZC3
92	344.5	115	40	M25x1.5		24	50	40	5	19	8	20	27	M8	6205ZZC3	6205ZZC3
92	369.5	115	40	M25x1.5		24	50	40	5	19	8	20	27	M8	6205ZZC3	6205ZZC3
84	392	125	50	M32x1.5		28	60	50	5	22	8	24	31	M10	6206ZZC3	6206ZZC3
98	412.5	125	50	M32x1.5		28	60	50	5	22	8	24	31	M10	6306ZZC3	6306ZZC3
95	466	125	50	M32x1.5		38	80	70	5	28	10	33	41	M12	6308ZZC3	6306ZZC3
95	504	125	50	M32x1.5		38	80	70	5	28	10	33	41	M12	6308ZZC3	6306ZZC3
146	608	193	60	M40x1.5	M20x1.5	42	110	100	5	36	12	37	45	M16	6309ZZC3	6307ZZC3
146	652	193	60	M40x1.5	M20x1.5	42	110	100	5	36	12	37	45	M16	6309ZZC3	6307ZZC3

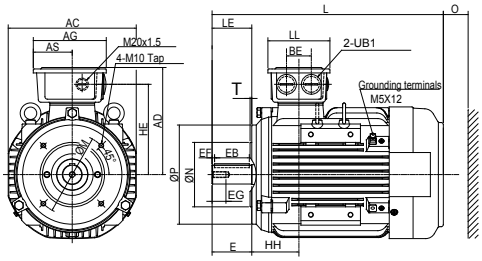

Fig1 F132

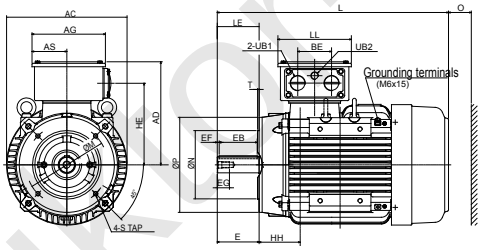

Fig1 F160

BC	BE	C	H		HE	HE'	K	L	LL	O	UB1	UB2	SHAFT EXTENSION									BEARING	
													D	E	EB	EF		F	G	GA	DB	DRIVE END	OPPOSITE DRIVE END
18.5	40	50	80	10	123.5		10	293	115	40	M25x1.5		19	40	32	4	16	6	15.5	21.5	M6	6204ZZC3	6204ZZC3
36	40	56	90	10	133.5		10		115	40	M25x1.5		24	50	40	5	19	8	20	27	M8	6205ZZC3	6205ZZC3
36	40	56	90	10	133.5		10		115	40	M25x1.5		24	50	40	5	19	8	20	27	M8	6205ZZC3	6205ZZC3
21	50	63	100	12	157		12		125	50	M32x1.5		28	60	50	5	22	8	24	31	M10	6206ZZC3	6206ZZC3
28	50	70	112	13	164.5		12		125	50	M32x1.5		28	60	50	5	22	8	24	31	M10	6306ZZC3	6306ZZC3
6	50	89	132	16	182		12	466	125	50	M32x1.5		38	80	70	5	28	10	33	41	M12	6308ZZC3	6306ZZC3
6	50	89	132	16	182		12	504	125	50	M32x1.5		38	80	70	5	28	10	33	41	M12	6308ZZC3	6306ZZC3
38	89		160	18	215	234.5		608	193	60	M40x1.5	M20x1.5	42	110	100	5	36	12	37	45	M16	6309ZZC3	6307ZZC3
38	89		160	18	215	234.5		652	193	60	M40x1.5	M20x1.5	42	110	100	5	36	12	37	45	M16	6309ZZC	6307ZZC3

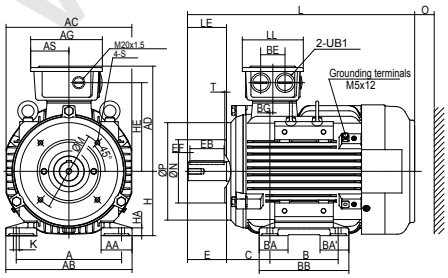

Fig1 F132

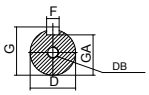

Note:
1.Dimensions in mm
2.Tolerance of Shaft End Diameter D: Under ψ19 ~ ψ28:j6.
3.Tolerance of shaft center high H: +0, -0.5.
4.Tolerance of N:j6.

www.redukor-mex.ru